rofin
LASER MICRO

StarWeld Performance Basic

Jewelry Microwelder for Manual Spot and Seam Welding

Easy-to-use, low-maintenance laser

Cost-effective, flexible operation

High quality and reliability

- Ergonomically designed for operator comfort; built by the world's most experienced laser technology company
- Manual spot / seam microwelding system with max energy to 80 joules
- Ideal for spot and seam welding of gold, silver, platinum, titanium, copper, aluminum and high-grade steel alloys
- Time-saving technique—Welding even in the direct vicinity of heat-sensitive parts, such as precious stones, without removing them from their settings
- The unique Sweet Spot Resonator improves laser beam quality and increases the ease of use for the operator
- Patented Pulse Shaping for designed and controlled laser energy
- Independently-opening gull-wing doors
- Variable-size workspace (removable bottom plate
- Easy-to-use programming and real text information on graphic display
- Noise reduction for all moving parts; allows operation in quiet environment
- *All consumables and spare parts in stock* and available for next day delivery from our production facility in Massachusetts

"With the StarWeld Jewelry Microwelder, the only limit to fine jewelry fabrication is your imagination"

... Brett Northcutt, Stuller

rofin
ROFIN-BAASEL INC

StarWeld Performance Basic

Drawings

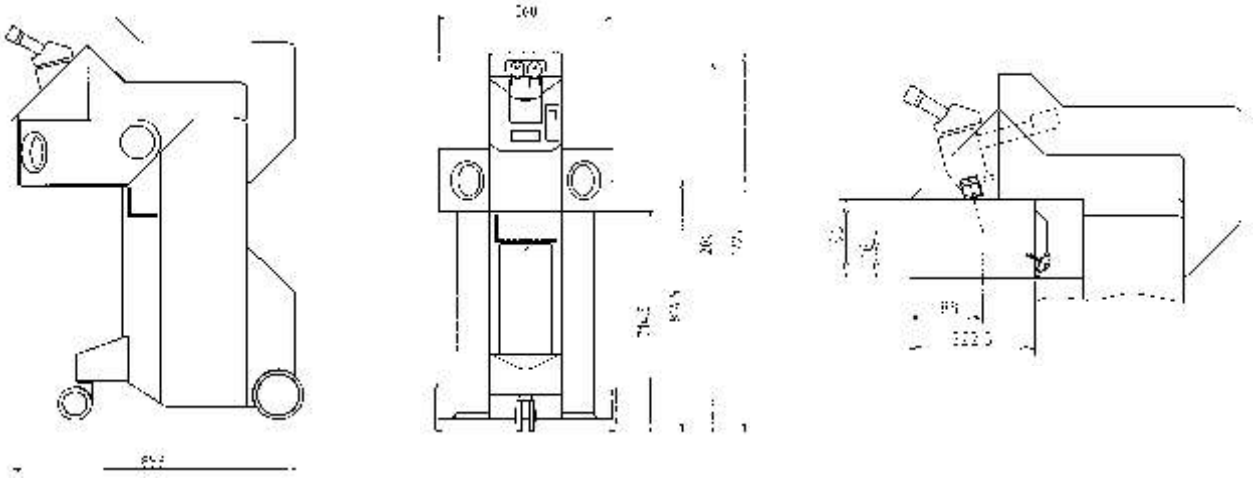

Dimensions (WxHxD): 580 x 1230 x 900mm (23" x 48" x 35"), 130 kg (286 lbs)

Technical Data

Laser	
Type	Pulsed Nd:YAG laser, wavelength 1,064 μm
Series	StarWeld Basic
Model	**Basic**
Nominal output power max.	40 W
Pulse energy max.	80 Joule
Pulse peak power max.	4.0 kW
Pulse width	0.5 - 20 ms
Pulse frequency	Single Shot-20 Hz
Motorized beam expansion	0.25 - 2.0 mm
Utilities	
Electrical:	208 - 240 V, 16 A, 50/60 Hz, single phase
Power consumption max.:	1.3 - 1.7 kW
Cooling unit:	Internal water-air heat exchanger
Shielding gas:	Connection for shielding gas

Basic Configuration

★Mobile unit with front lockable wheel ★10x Standard Jena 4H Microscope (15x total magnification in working chamber)★ Sweet spot resonator for copper, precious metals and sensitive materials ★Pulse shaping ★Two halogen lights for illumination of working chamber ★Single fixed shielding gas nozzle ★Removable base plate for large parts ★Self Diagnostic Programming ★Operation via joysticks in working chamber ★Safety shutter operable from within the working chamber ★Selectable user language (German, English, Italian, French, Spanish) ★99 Parameter memory locations

Options

★10x Leica microscope (15X magnification in working chamber) ★ Leica or CCD camera

Technical data is subject to change without prior notice.

MICRO

ROFIN-BAASEL Inc.
330 Codman Hill Road
Boxborough, MA 01719
Tel: +(978) 635-9100
Fax: +(978) 635-9199
info@rofin-baasel.com

ROFIN-SINAR, Inc.
40983 Concept Drive Plymouth, MI 48170
Tel: +(734) 416-0247
Fax: +(734) 455-2741
info@rofin-inc.com