rofin
LASER MICRO

StarWeld Performance

Jewelry Microwelder for Manual Spot and Seam Welding

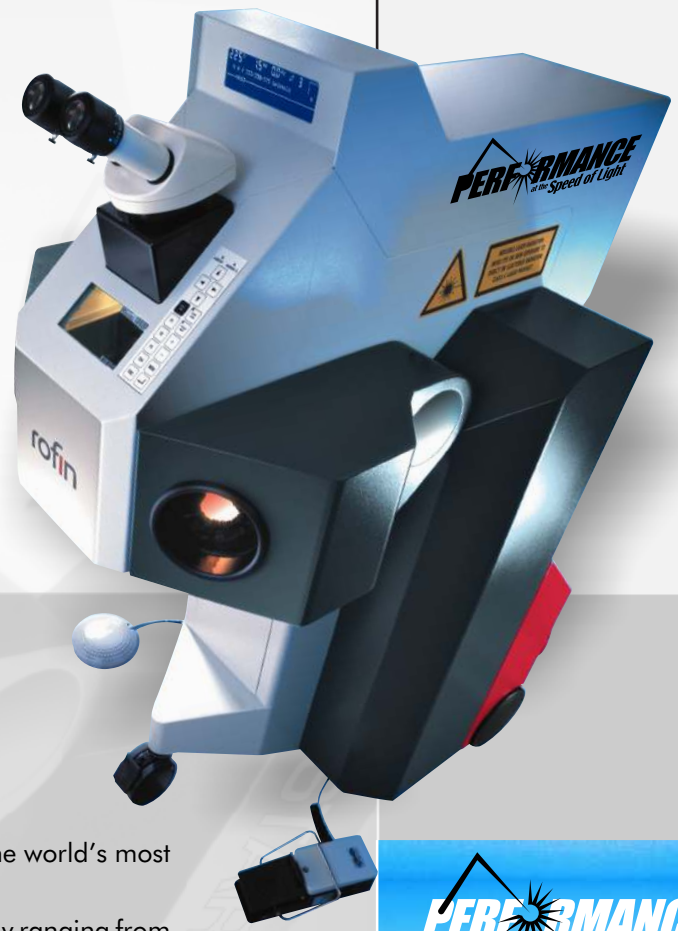

Easy-to-use, low-maintenance laser

Flexible operation

High quality and reliability

- Ergonomically designed for operator comfort; built by the world's most experienced laser technology company
- Manual spot / seam microwelding system with max energy ranging from 80 joule to 100 joule
- Ideal for spot and seam welding of gold, silver, platinum, titanium, copper, aluminum and high-grade steel alloys
- Time-saving technique—Welding even in the direct vicinity of heat-sensitive parts, such as precious stones, without removing them from their settings
- The unique Sweet Spot Resonator improves laser beam quality and increases the ease of use for the operator
- Patented Pulse Shaping for designed and controlled laser energy
- New LCD view shutter allows the laser to fire at 20 shots per second
- Variable-size workspace (removable bottom plate
- Easy-to-use programming and real text information on graphic display
- Improved ergonomic design
- Noise reduction for all moving parts; allows operation in quiet environment
- *All consumables and spare parts in stock* and available for next day delivery from our production facility in Massachusetts

"With the StarWeld Jewelry Microwelder, the only limit to fine jewelry fabrication is your imagination"

… Brett Northcutt, Stuller

StarWeld Performance

rofin
ROFIN-BAASEL INC

Drawings

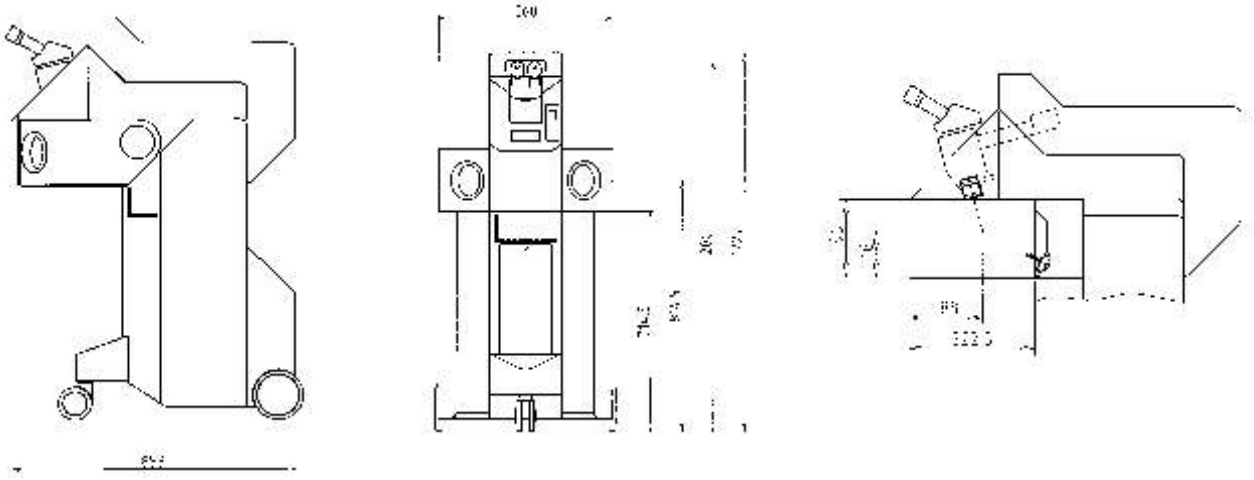

Dimensions (WxHxD): 580 x 1230 x 900mm (23″ x 48″ x 35″), 130 kg (286 lbs)

Technical Data

Laser		
Type	Pulsed Nd:YAG laser, wavelength 1,064 μm	
Series	StarWeld Performance Microwelder 6002	
Model	**DX**	**LX**
Nominal output power max.	50 W	50 W
Pulse energy max.	80 Joule	100 Joule
Pulse peak power max.	6.0 kW	9.0 kW
Pulse width	0.5 - 50 ms	0.5 - 50 ms
Pulse frequency	Single Shot-20 Hz	Single Shot-20 Hz
Motorized beam expansion	0.25 - 2.0 mm	0.25 - 2.0 mm
Utilities		
Electrical:	208 - 240 V, 16 A, 50/60 Hz, single phase	
Power consumption max.:	1.3 - 1.7 kW	
Cooling unit:	Internal water-air heat exchanger	
Shielding gas:	Connection for shielding gas and cooling air	

Basic Configuration

★Mobile unit with front lockable wheel ★10x Leica Microscope (15x total magnification in working chamber)★ Sweet spot resonator for copper, precious metals and sensitive materials ★Pulse shaping LCD View shutter★Two halogen lights for illumination of working chamber ★Two shielding gas nozzles (fixed and flexible) ★Flexible nozzle for cooling work piece ★Removable base plate for large parts ★Integrated exhaust unit with filter (HEPA) ★Self Diagnostic Programming★Operation via joysticks in working chamber ★Safety shutter operable from within the working chamber ★Selectable user language (German, English, Italian, French, Spanish) ★ 99 Parameter memory locations

Options

★Fine spot welding for spots below Ø 100 μm mechanical or electrically activated fine welding device ★16x Leica microscope (24X magnification in working chamber) ★ Cobra or ISIS Viewing system ★ CCD camera ★ Motorized x-y-z axis for mold repair

Technical data is subject to change without prior notice.

MICRO

ROFIN-BAASEL Inc.
330 Codman Hill Road
Boxborough, MA 01719
Tel: +(978) 635-9100
Fax: +(978) 635-9199
info@rofin-baasel.com

ROFIN-SINAR, Inc.
40983 Concept Drive Plymouth, MI 48170
Tel: +(734) 416-0247
Fax: +(734) 455-2741
info@rofin-inc.com